PLANTERWORX

HOME

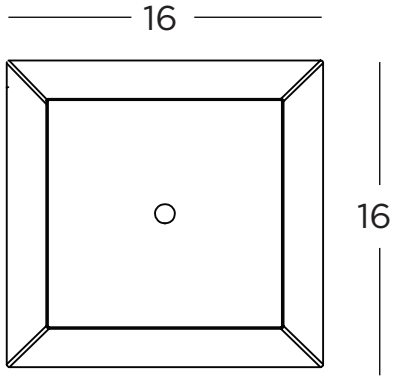

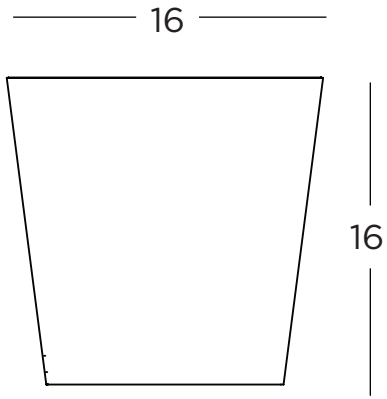

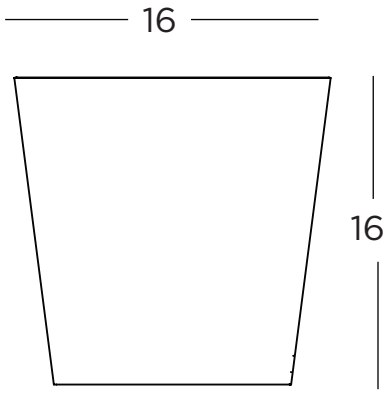

TAPERED PLANTER
16"H X 16"W X 16"D

VOLUME: 12.28 U.S. GALLONS
1.64 CUBIC FEET

AVAILABLE IN CORTEN STEEL* 20.42 lbs
& POWDER COATED ALUMINUM 8.20 lbs
IN PEWTER OR SILVER

PEWTER SILVER CORTEN

*PLANTERWORX DOES NOT SUPPLY PRODUCTS WEATHERED
THE PATINA/WEATHERING DEVELOPS OVER TIME.*

PLANTERWORX 987 ESSEX ST BROOKLYN NY 11208
T 718.963.0564 F 718.963.0565
PLANTERWORX.COM